LPO Optical Module Low Loss Overseas Warehouse

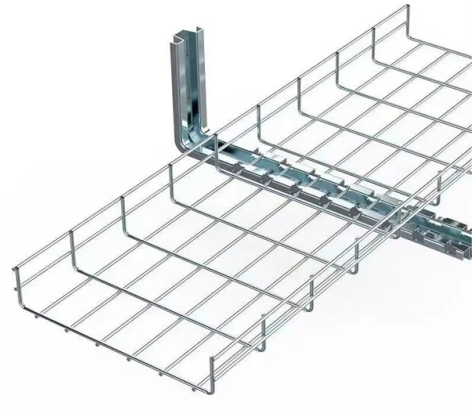

Overview

Designed for AI/ML applications, this advanced 800G DR8 OSFP finned top LPO module enables high-speed data transmission with ultra-low power consumption, reduced latency, and superior cost efficiency. Amphenol XPO-LPO optical transceiver delivers next-generation 12. 8T Ethernet connectivity with 224 Gb/s per lane. Leveraging LPO technology, the module provides ultra-low-latency, power-efficient optical links tailored for AI, high-performance computing, and hyperscale data center applications. It. An LPO (Linear Pluggable Optics) solution offers considerable power savings for optical interconnect by removing the digital signal processing (DSP) function from the pluggable optical module. The idea is simple: instead of a DSP (digital signal processor) inside the module – replacing it with transimpedance amplifier (TIA) and a driver chip with high linearity and EQ capability – LPO shifts signal processing into. having tripled in the past decade. S Data Center Energy Use, published by the Lawrence Berkeley National Laboratory, data centers account for 4. in 2023, and are projecte to increase to 6.

© 2026 AK OPTICAL SYSTEMS - All rights reserved

Article Content

XPO-LPO Optical Transceiver | Optical Interconnect

Amphenol XPO-LPO optical transceiver delivers next-generation 12.8T Ethernet connectivity with 224 Gb/s per lane. Leveraging LPO technology,

Introducing Linear Pluggable Optics (LPO)

This article gives a short insight into how LPO technology works, how it differs from DSP-based optics, the scenarios where it offers the most

LRO, LPO, and Silicon Photonics

The use of silicon photonics can lower the cost of producing LRO and LPO modules, because silicon photonics relies on semiconductor fab manufacturing processes.

Linear Pluggable Optics – An Overview

Comparison to CPO g the need for a standalone module. Although CPO is becoming increasingly popular, LPO is seen as a natural evolutionary path for pluggables, offering lower risk compared to

FS Launches 800G LPO Module: A Power Efficiency and Latency

FS introduces an 800G LPO optical module, powering AI and HPC data centers with ultra-low power consumption, reduced latency, and proven reliability.

Linear Pluggable Optics (LPO) Europe | EU-Tested 400G/800G Modules

This innovation delivers up to 30% lower power consumption, reduced latency, and simplified thermal management — perfect for high-density fabrics and AI workloads.

Linear pluggable optics for data centers

Half-Retimed Linear Optics creates an easier composite channel, allowing greater margin and robustness Shorter electrical Establishing compliant interfaces allows multiple vendors to

Optical Interconnect Technology Analysis: LPO, NPO,

Exploring optical interconnects for AI data centers: LPO for low-power, short-distance links, NPO for high-density, near-package connections,

Linear Drive Pluggable Optics

Eoptolink offers a full portfolio of LPO optics for OSFP, OSFP-RHS, QSFP-DD and QSFP112 transceivers. At ECOC 2023, Eoptolink will be conducting an interop demo to highlight

© 2026 AK OPTICAL SYSTEMS - All rights reserved

What is LPO?. In the dynamic world of optical | by

By adopting LPO, the power consumption and cost associated with optical modules can be significantly reduced, contributing to improved energy

Exploring LPO Linear-Drive Optical Modules: A Modern

Conclusion The advancement of LPO technology marks a significant breakthrough in optical module technology. Addressing key concerns such as

Linear Drive Pluggable Optics

Link using optical modules retimed by DSP The red trace between the Host ASIC and module DSP illustrates the electrical channel. The electrical channel has a channel loss that varies depending on

Understanding DSP, LPO, and LRO in Optical

As global networks push toward faster, more energy-efficient transmission, technologies like DSP□Digital Signal Processing□, LPO□Low

overseas-warehouse-lpo-optical-module-2

17 Companies and suppliers for overseas-warehouse-lpo-optical-module-2 Find wholesalers and contact them directly Leading B2B martketplace Find companies now!

What is an LPO Optical Module?-fiberwdm

As a key carrier of information transmission, optical communication technology continues to evolve to meet the explosive growth in bandwidth demand. Among these advancements, the LPO

Linear-drive Pluggable Optics: A Game-Changing Technology in

1. Low power consumption: LPO optical modules reduce power consumption by about 50% compared to pluggable optical modules. With the Linear-drive solution, the power consumption

What Is LPO Optical Transceiver Module? 2024 Complete Guide

Learn what LPO optical transceiver modules are, their advantages over DSP/CPO, challenges, and how Weunion''s LPO solutions power 800G data center deployments.

Linear Pluggable Optics (LPO) Europe | EU-Tested 400G/800G Modules

LPO Series — EU-Tested Low-Power Optical Transceivers Next-generation 400G and 800G modules for data centers, AI clusters, and telecoms — validated in a European lab, ready to ship from Europe.

© 2026 AK OPTICAL SYSTEMS - All rights reserved

Related Video Reference

This video was associated with the source search result. Verify technical details against current product documentation and project requirements.

Contact Us

Continue your research online:

Website: https://aboutkitchens.biz
Technical inquiry: https://aboutkitchens.biz/project-desk.html
North American project location: Research Triangle Park, North Carolina, United States

This document is for preliminary research. Verify specifications against current standards, product documentation and project requirements.

© 2026 AK OPTICAL SYSTEMS - All rights reserved